FOR-1754 Rev.1.2

未注公差/General tolerances(mm)													
0~3	>3~6	>6~10	>10~18	>18~30	>30~50	>50~80	>80~120	>120~180	>180~250	>250~315	>315~400	>400~500	>500
±0.12	±0.18	±0.22	±0.26	±0.31	±0.37	±0.57	±0.80	±0.93	±1.05	±1.15	±1.60	±1.20	±2.50

0.1/10

±2°

未标尺寸请参考3D文件

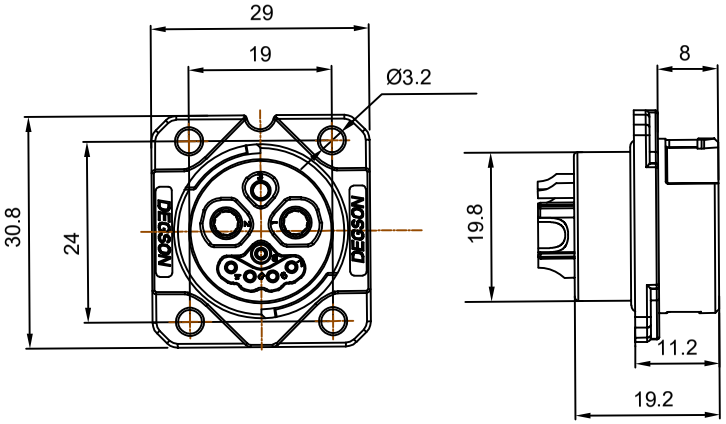

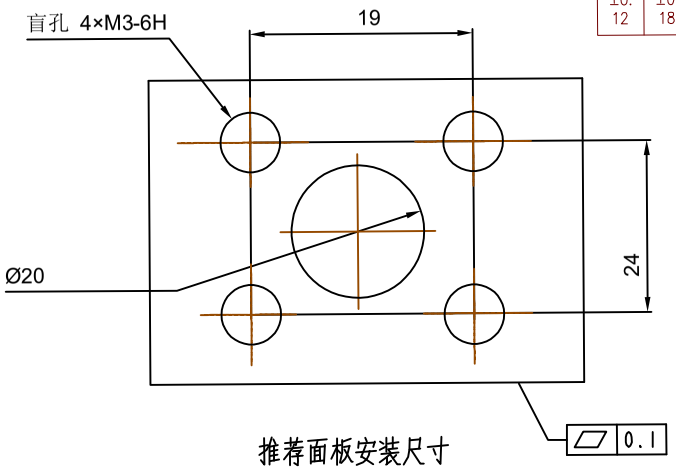

推荐面板安装尺寸

推荐面板厚度最大5mm

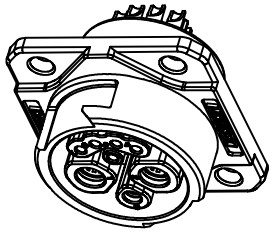

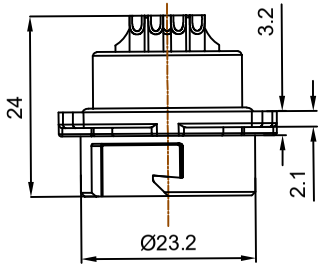

型号说明

SA-EBBL-2105-F-00A(H)

- 插座
- 组装式
- 系列名称
- 产品插针数量
  功率针2pin，
  PE针1pin，
  信号针5pin
- 母端
- 通用型环保产品

额定电压电流/Rated Voltage/Current	110V/50A
绝缘电阻/Insulation resisance	≥100MΩ
插拔次数/Mechanical working life(mating cycles)	3000
耐电压/Withstanding voltage	500V AC
使用温度范围/Operating temperature(°C)	-40~+85
防水等级/Levels of protection	IP67(Single)
接线方式/Terminal	Soldering

MATERIAL: /		SURFACE: /		
MAT NO.:		宁波高松电子有限公司 NINGBO DEGSON ELECTRICAL CO., LTD		
STATUS: /				
APPD:		NAME: SA-EBBL-2105-F-00A(H)		
CHKD:				
DRFT: HuangJJ 2021.8.20		DRAWING NO.:	REV	T0
SIZE: A4	mm (inch)	TYPE: CUSTOMER DRAWING	SCALE: 2:1	SHEET 1/1

A0				
T0				
REV	ECN	DESCRIPTION	DRFT XXX XX	DATE 20XX.XX.X X

Transfer or duplication of this document as well as the utilization or communication of its contents are prohibited unless explicit authorization is granted. Violations will be liable for compensation. All rights reserved for patent, utility model or designs registrations. 除非给予明确授权，否则禁止转让、复制、利用、交流本文件的内容。侵犯者将负赔偿责任。本公司保留对涉及发明、实用新型和外观专利的所有权利。