FOR-1754 Rev.1.1

未注公差/General tolerances(mm)														
0 ~ 3	>3 ~ 6	>6 ~ 10	>10 ~ 18	>18 ~ 30	>30 ~ 50	>50 ~ 80	>80 ~ 120	>120 ~ 180	>180 ~ 250	>250 ~ 315	>315 ~ 400	>400 ~ 500	>500	0.1/10
±0.12	±0.18	±0.22	±0.26	±0.31	±0.37	±0.57	±0.80	±0.93	±1.05	±1.15	±1.60	±2.20	±2.50	±2°

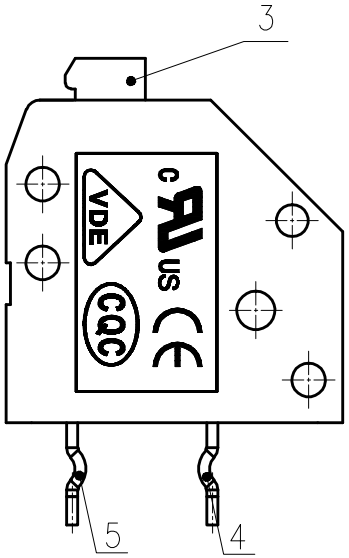

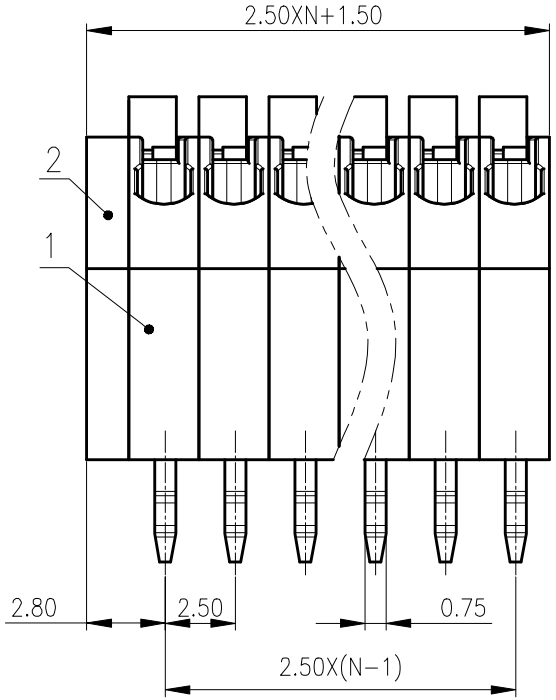

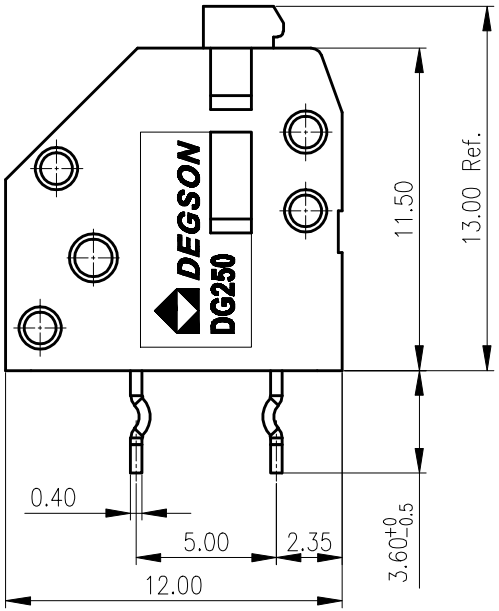

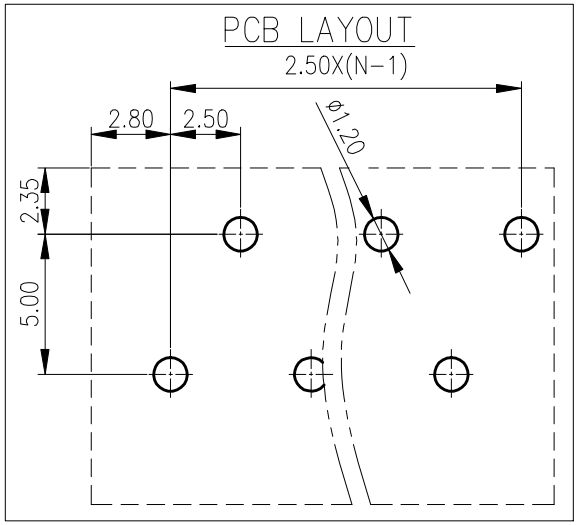

5	Big Pin header	Copper Alloy	Sn plated
4	Small Pin header	Copper Alloy	Sn plated
3	Button	PA66	UL94V-0
2	Cover	PA66	UL94V-0
1	Housing	PA66	UL94V-0
ITEM	NAME OF PART	MATERIAL	NOTES

REV	ECN	DESCRIPTION	DRFT	DATE

UL 标准/UL Standard:	B	C	D
额定电压/电流/Rated Voltage(V)/Current(A)	300/2	300/2	300/2
IEC 标准/IEC Standard:			
过压类别/Overvoltage Category/污染等级/Pollution Degree	/	III/2	/
额定电压/电流/Rated Voltage(V)/Current(A)	/	250/2	/
工频耐压/Withstanding voltage(V/1Min)	AC2000		
线径范围(硬线和软线)/Wire Range(rigid and flexible)(mm^2/AWG)	0.2~0.5/24~20		
间距/Pitch(mm)/线数范围/Poles	2.5/N=01~24P		
剥线长度/Stripping length(mm)	8.5-9.5		
使用温度范围/Operating temperature(°C)	-40~+105		
符合RoHS环保要求/Conform to RoHS	Yes		
标准颜色编号/Standard color number: PANTONE / RAL	/		

MATERIAL: / SURFACE: /

MAT NO.: /

STATUS: /

APPD: LiGL 2020.06.19

CHKD: Mek 2020.06.19

DRFT: YYC 2017.09.02

DEGSON® 宁波高松电子有限公司 NINGBO DEGSON ELECTRICAL CO., LTD

NAME: DG250-2.5-XXP-1Y-01A(H)

DRAWING NO.: DG250-2.5-C02 REV T1

SIZE: A4 mm (inch) TYPE: CUSTOMER DRAWING SCALE: 4:1 SHEET 1/1